KS4460,1,2,3,7,8NX

Widespread Lavatory Faucet With Brass Pop-Up

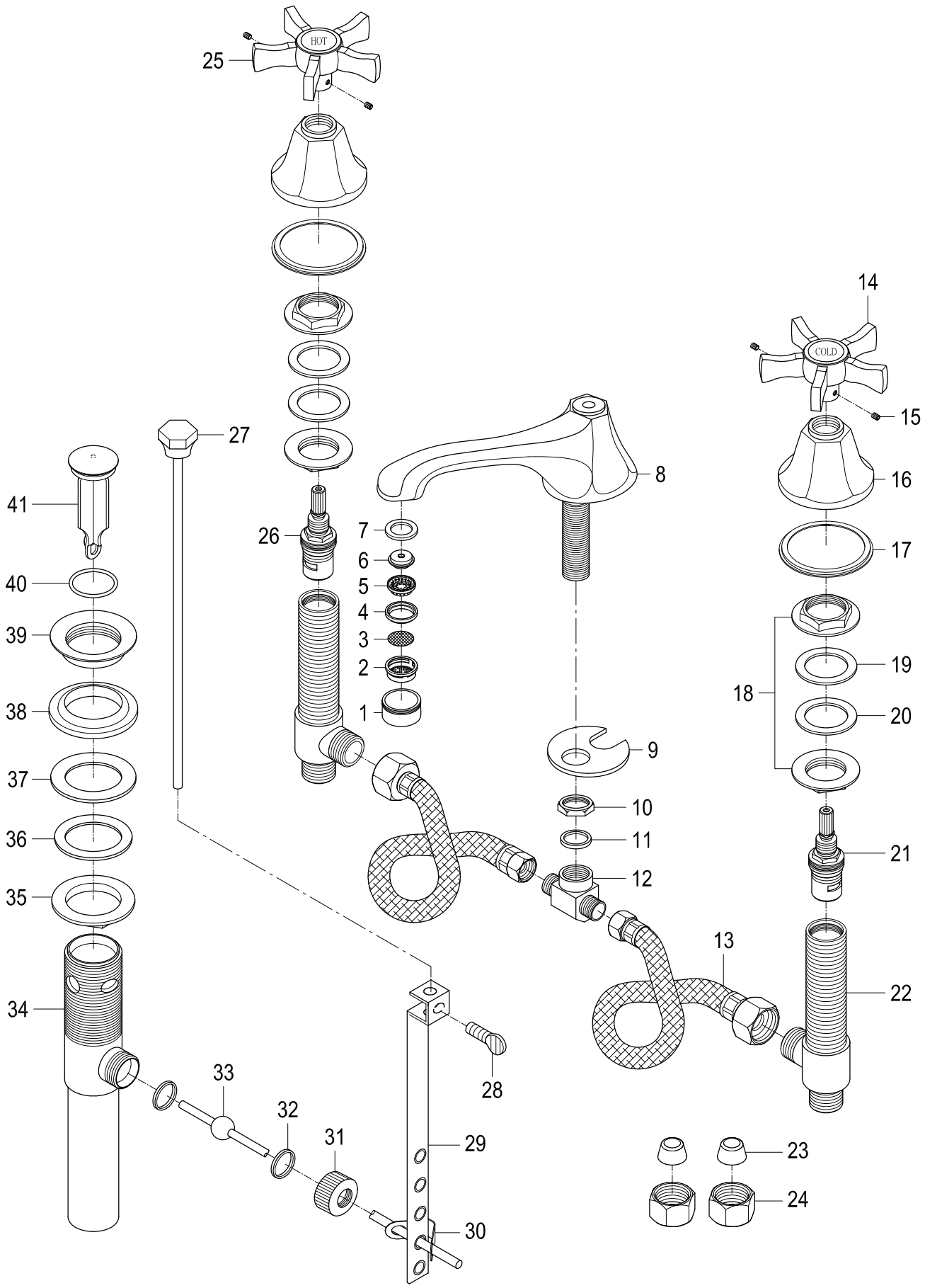

Ref# KS4460,1,2,3,7,8NX | 2021-04-C